2600, 2700 and 2800 Semi-Integral; 3600 and 3700 Drawn Moldboard Plows

JOHN DEERE

TECHNICAL MANUAL

2600, 2700 and 2800 Semi-Integral; 3600 and 3700 Drawn Moldboard Plows

TM1240 Issue K2 English

John Deere Harvester Works
TM1240 Issue K2

LITHO IN U.S.A.
ENGLISH

2600, 2700, AND 2800 SEMI-INTEGRAL; 3600 AND 3700 DRAWN MOLDBOARD PLOWS

TECHNICAL MANUAL
TM-1240 (Nov-82)

CONTENTS

All information, illustrations and specifications contained in this manual are based on the latest information available at the time of publication. The right is reserved to make changes at any time without notice.

Because John Deere sells its products world-wide, U.S. units of measure are shown with their respective Metric equivalents throughout this technical manual. These equivalents are the SI (International System) Units of Measure.

INTRODUCTION

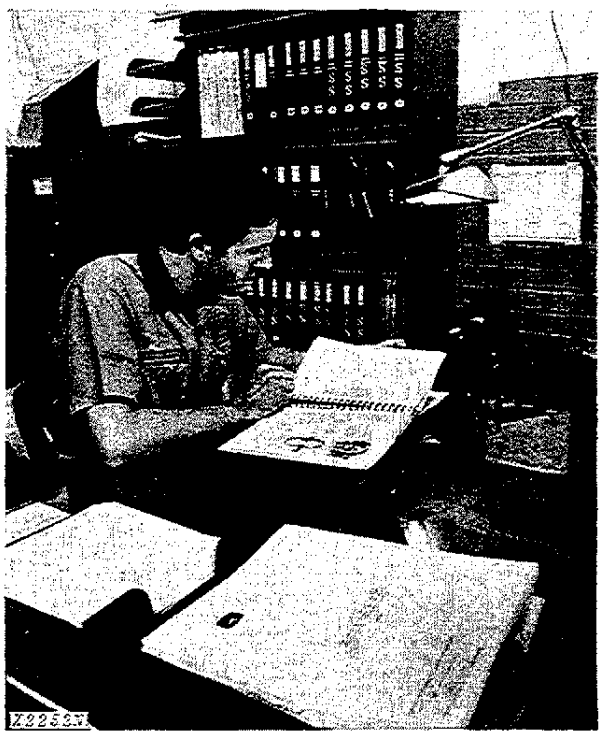

Use FOS Manuals for Reference

Use Technical Manuals for Actual Service

This technical manual is part of a twin concept of service:

- **FOS Manuals—for reference**
- **Technical Manuals—for actual service**

The two kinds of manuals work as a team to give you both the general background and technical details of shop service.

Fundamentals of Service (FOS) Manuals cover basic theory of operation, *fundamentals* of trouble shooting, *general* maintenance, and *basic* types of failures and their causes. FOS Manuals are for training new people and for reference by experienced technicians.

Technical Manuals are concise service guides for a *specific* machine. Technical manuals are on-the-job guides containing only the vital information needed by an experienced technician.

Some features of this technical manual:

- *Table of contents at front of manual*
- *Exploded views showing parts relationship*
- *Photos showing service techniques*

This technical manual was planned and written for you—an experienced technician. Keep it in a permanent binder in the shop where it is handy. Refer to it whenever in doubt about correct service procedures or specifications.

Using the technical manual as a guide will reduce error and costly delay. It will also assure you the best in finished service work.

⚠ This safety alert symbol identifies important safety messages in this manual. When you see this symbol, be alert to the possibility of personal injury and carefully read the message that follows.

SAFETY

This safety alert symbol identifies important safety messages in this manual. When you see this symbol, be alert to the possibility of personal injury and carefully read the message that follows.

AVOID HIGH PRESSURE-FLUIDS

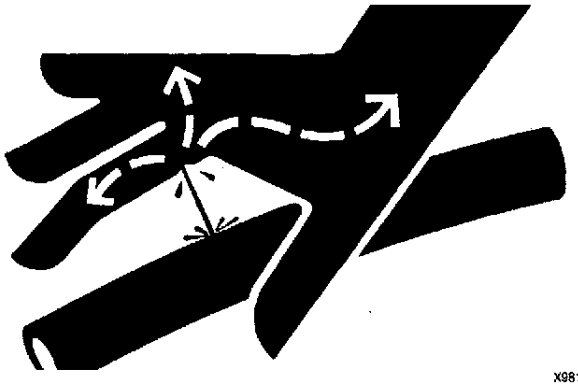

Fig 1-Fluid Leak

Escaping fluid under pressure can penetrate the skin causing serious injury. Relieve pressure before disconnecting hydraulic or other lines. Tighten all connections before applying pressure. Keep hands and body away from pinholes and nozzles which eject fluids under high pressure. Use a piece of cardboard or paper to search for leaks. Do not use your hand.

If ANY fluid is injected into the skin, it must be surgically removed within a few hours by a doctor familiar with this type injury or gangrene may result.

Transport Safely

Use care when transporting across rough ground.

Pin the drawbar tightly during road transport to provide stability.

Use Proper Tools Only

Use only metric tools on metric hardware. Other tools may not fit properly and could slip causing injury.

Lubricate the Plow Safely

Grease, oil, or adjust the plow only when tractor engine is off and plow is in a stationary position.

Dispose of Spray Cans Safely

If spray can paint is used for protecting plow bottoms to be put in storage, be careful when discarding empty can. Do not incinerate or puncture can.

SERIAL NUMBERS

When ordering parts, always refer to the model and serial number.

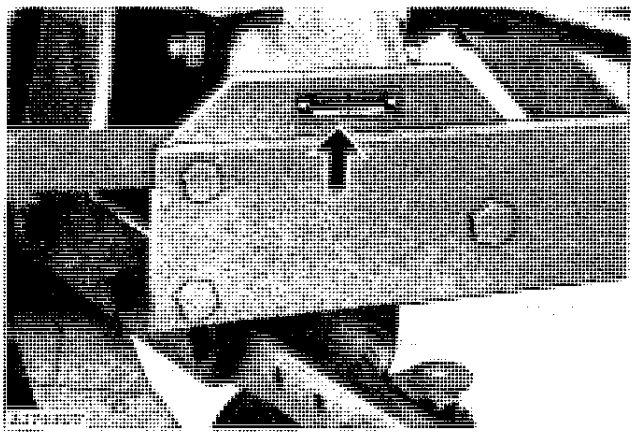

A17680Y

Fig. 2-Serial Number

The serial number plate for all 2600 and 3600 Plows, and 4 and 5-bottom 2700 and 2800 Plows is located at the front of the main frame tube above the guide rail.

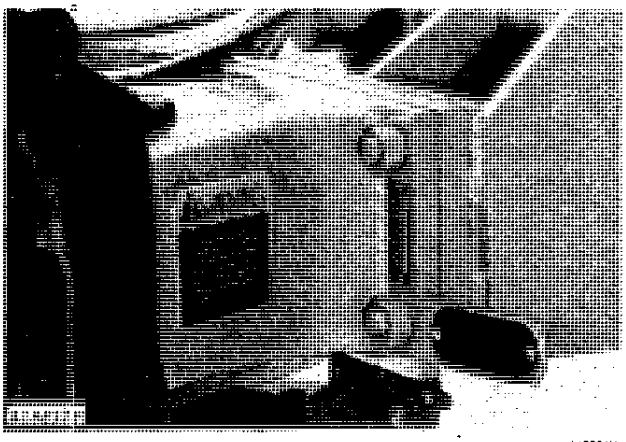

A18831Y

Fig. 3-Serial Number

The serial number plate for 6-, 7-, and 8-bottom 2700 and 2800 Plows is located at the front of the main truss tube behind the guide rail.

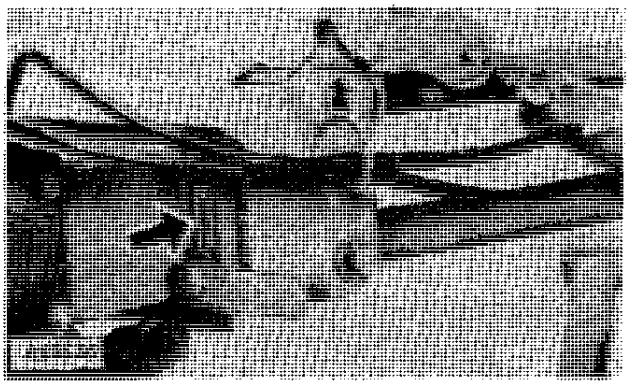

A22636

Fig. 4-Serial Number

The serial number plate for 3700 Plows is located behind the front furrow wheel support.

BOLT TORQUES

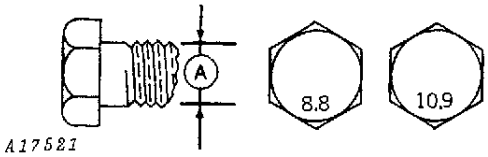

A17521

Fig. 5-Bolt Torque

BOLT TORQUE CHART					
		Marking on Head			
Bolt Diameter "A"	Wrench Size Metric	8.8		10.9	
		N·m	(Lb-Ft)	N·m	(Lb-Ft)
5 mm	8 mm	6.5	(5)	9.2	(7)
6 mm	10 mm	11.1	(8)	15.6	(12)
8 mm	13 mm	27	(20)	38	(30)
10 mm	16 mm	53	(39)	75	(55)
12 mm	18 mm	93	(70)	130	(96)
16 mm	24 mm	230	(170)	325	(238)
20 mm	30 mm	450	(332)	635	(468)
24 mm	36 mm	780	(575)	1100	(811)
30 mm	46 mm	1550	(1143)	2180	(1608)

NOTE: Bolts having lock nuts with plated or wax finish should be tightened to approximately 50% of amounts shown in chart.

Torque bolts as specified in above chart except where noted. Keep bolts tight at all times. Loose bolts can cause breakage of parts. Check tightness of bolts periodically and keep them tightened to specified torques. When bolts are replaced, be sure they are replaced with bolts of equal strength.

Metric bolts furnished with the plow are identified by 8.8 or 10.9 on the head. These markings identify the strength of the bolt. Metric nuts are identified by 8 or 10 stamped on the top or bottom of the nut.

DIAGNOSING MALFUNCTIONS

NOTE: This information pertains to the hydraulic system only. For information concerning complete plow operation diagnosing, refer to the operator's manual.

2600, 2700 AND 2800 PLOWS

Problem	Possible Cause	Possible Remedy	Page
Will not stay raised in transport	Lift (tailwheel) cylinder leakage	Repair cylinder	14
	Front furrow wheel leakage (On-land plows)	Repair cylinder	18
Steering wheel cylinder out of phase excessively	Steering control valve cylinder leakage	Repair cylinder	6
	Steering wheel cylinder leakage	Repair cylinder	11
	Defective relief valve	Inspect valve	8
	Poppet valve leakage	Inspect poppet	8
	Poppet driver misadjusted	Adjust poppet driver	10
	3600 PLOW		
Will not stay raised in transport	Front furrow wheel cylinder leakage	Repair cylinder	28
	3700 PLOW		
Will not stay raised in transport	Front furrow wheel cylinder leakage	Repair cylinder	44
	Hitch cylinder leakage	Repair cylinder	41
	Land wheel cylinder leakage	Repair cylinder	47
	Tailwheel cylinder leakage	Repair cylinder	51

HYDRAULIC REPAIR
STEERING CONTROL FOR 2600, 2700 AND 2800 PLOWS

REMOVAL

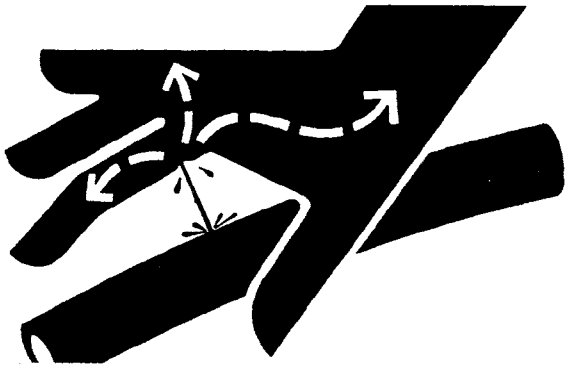

X9811

Fig. 1-Fluid Leak

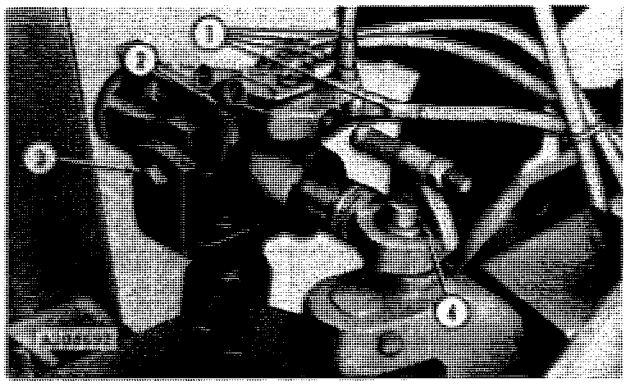

A20869Y

Fig. 2-Removing Steering Control

CAUTION: Escaping fluid under pressure can penetrate the skin causing serious injury. Relieve pressure before disconnecting hydraulic or other lines. Tighten all connections before applying pressure. Keep hands and body away from pinholes and nozzles which eject fluids under high pressure. Use a piece of cardboard or paper to search for leaks. Do not use your hand.

If ANY fluid is injected into the skin, it must be surgically removed within a few hours by a doctor familiar with this type injury or gangrene may result.

When working with or replacing any hydraulic components, be sure to install support stand and lower plow to the ground. Shut off tractor engine, move tractor remote cylinder operating levers back and forth to relieve pressure.

1. Mark hoses with identification tags and remove all hoses. Cap lines and ports.

2. If only valve is to be repaired, remove two cap screws.

3. If complete assembly is to be repaired, loosen set screws to remove both cap screws.

4. Remove spring pin and lift off complete steering control.

NOTE: Repairing the valve and cylinder are shown separately on the following pages.

DISASSEMBLY

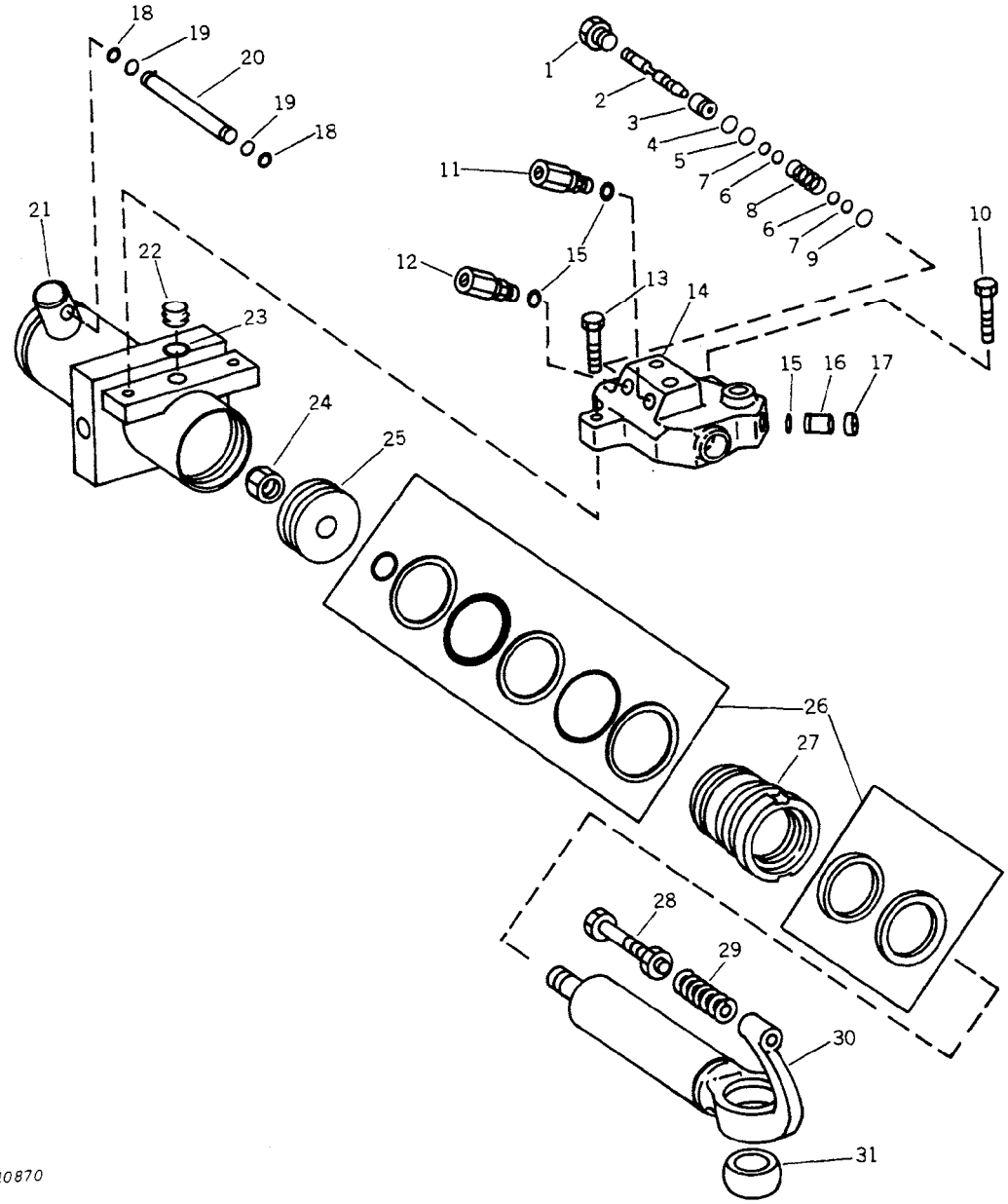

1—Retainer	**9—Seal**	**17—Plug**	**25—Piston**
2—Poppet	**10—Cap Screw**	**18—O-Ring (2 used)**	**26—Cylinder Seal Kit**
3—Guide	**11—Relief Valve (275 bar)**	**19—Backup Washer (2 used)**	**27—Guide**
4—Backup Washer	**12—Relief Valve (345 bar)**	**20—Tube**	**28—Cap Screw and Lock Nut**
5—O-Ring	**13—Cap Screw**	**21—Barrel**	**29—Spring**
6—O-Ring (2 used)	**14—Valve Body**	**22—Seal**	**30—Rod**
7—Backup Washer (2 used)	**15—O-Ring**	**23—O-Ring**	**31—Ball**
8—Spring	**16—Check Valve**	**24—Stop Nut**	

Fig. 3-Steering Control Components

Disassemble components to be repaired or inspected.

Discard seals, O-rings and backup washers.

INSPECTION

Inspect all parts for damage. Replace all damaged parts.

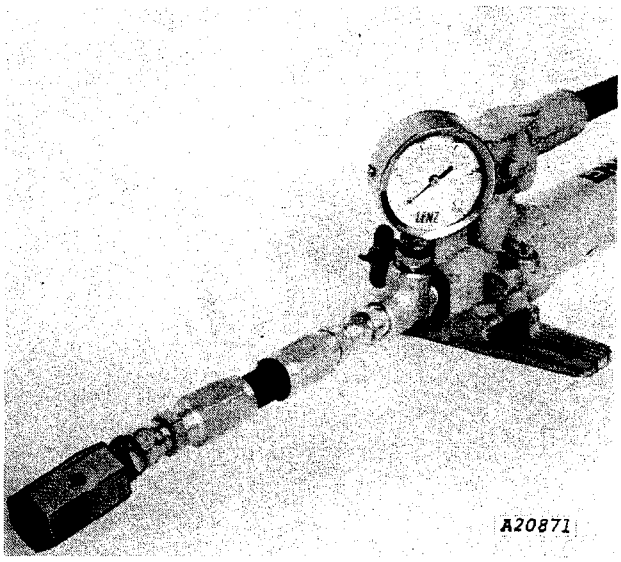

A20871

Fig. 4-Testing Relief Valves

Test the two relief valves (11 and 12, Fig. 3) with a hydraulic pump and pressure gauge. They have their relief setting (275 or 345 bar) stamped on them.

The relief valve stamped 275 bar must relieve at:

27 480 kPa ± 1 380 kPa
(275 bar) ± (14 bar)
(4000 psi) ± (250 psi)

The relief valve stamped 345 bar must relieve at:

34 475 kPa ± 1 700 kPa
(345 bar) ± (17 bar)
(5000 psi) ± (250 psi).

NOTE: The relief valves cannot be repaired. A new relief valve must be installed if existing valve is defective.

ASSEMBLY

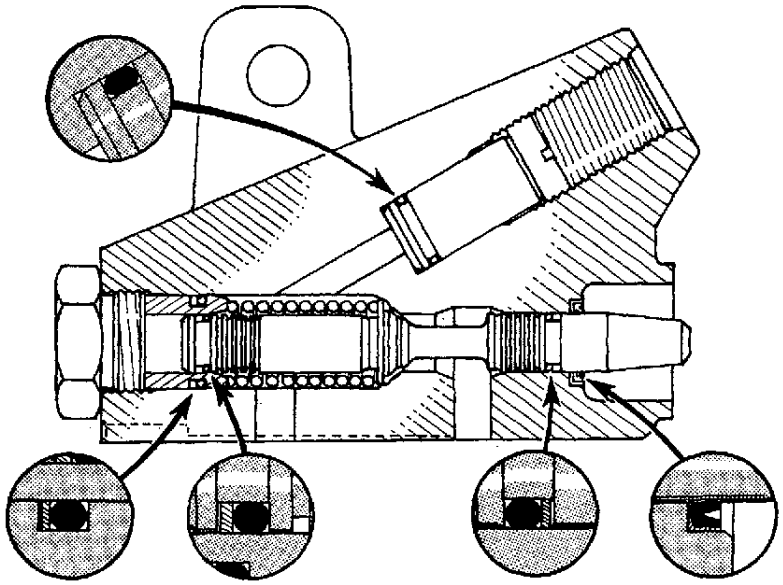

Fig. 5-Control Valve Assembly

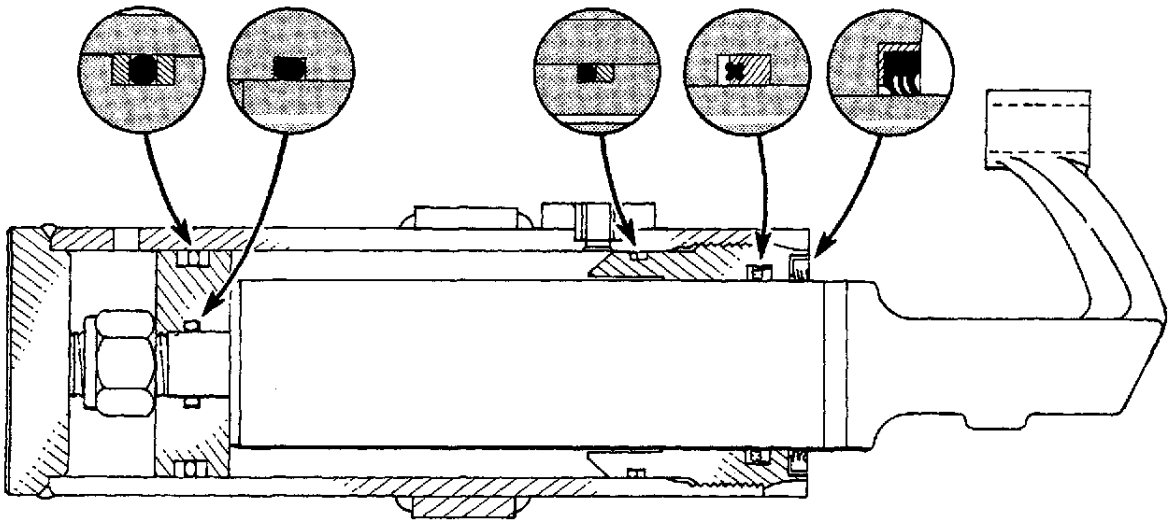

Fig. 6-Control Cylinder Assembly

Be sure all parts are clean.

Coat all seals, O-rings and backup washer with clean hydraulic oil.

Torque rod nut to 200-340 N·m (150-250 lb-ft).

Brush NEVER-SEEZ® (John Deere part number PT569) to gland threads and torque to 340-400 N·m (250-295 lb-ft).

®NEVER-SEEZ is a registered Trademark of the NEVER-SEEZ Corporation.

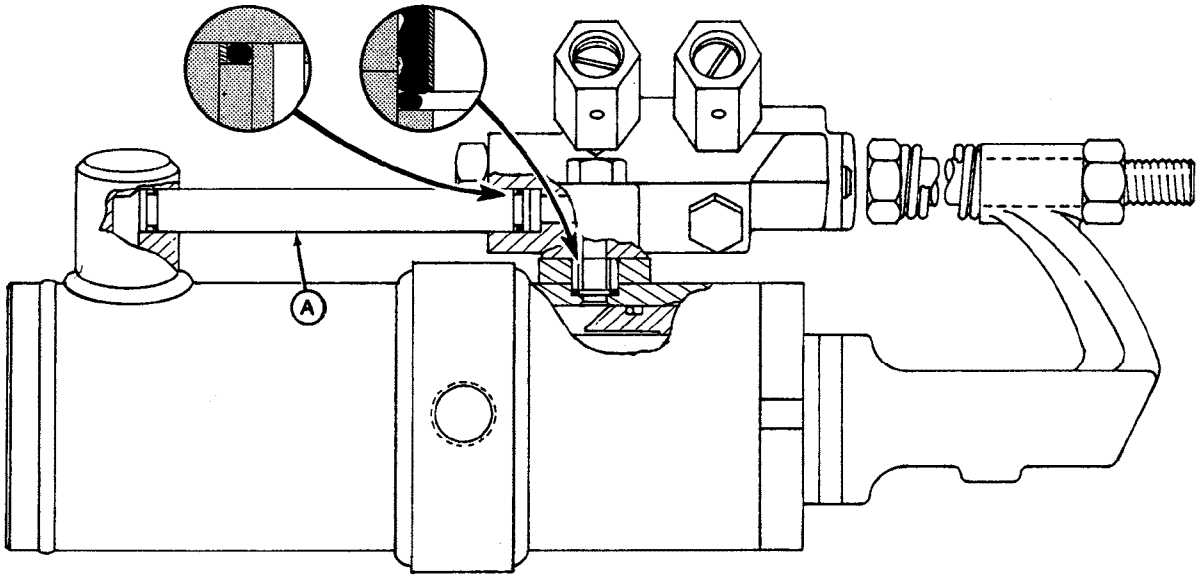

Fig. 7-Control Valve and Cylinder Assembly

Be sure tube (A) is properly fitted before torquing mounting bolts to 90 N·m (70 lb-ft).

INSTALLATION

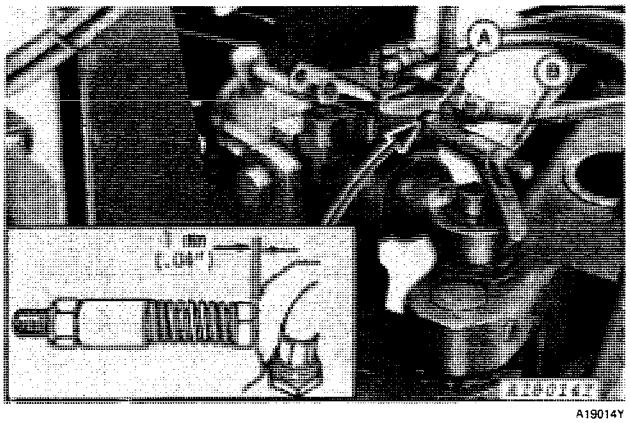

Fig. 8-Installing Steering Control Assembly

Position cylinder ball over pin and install spring pin.

Install side cap screws and tighten set screws.

To check the adjustment of the poppet driver (A), proceed as follows:

Raise the plow to transport position and make a tight right turn with the tractor until the crossbar support is hitting the right-hand hitch stop. At that point the poppet driver should come into contact with the poppet. The clearance between the poppet driver and the valve casting should be 1 mm (0.04-in.) (about the thickness of a dime).

To adjust the poppet driver (A), loosen or tighten lock nut (B) and adjust poppet driver as needed.

NOTE: During a tight right turn, the steering wheel cylinder rod must be exposed 260 mm (10-1/4 in.). See page 55.