440B

Service Manual

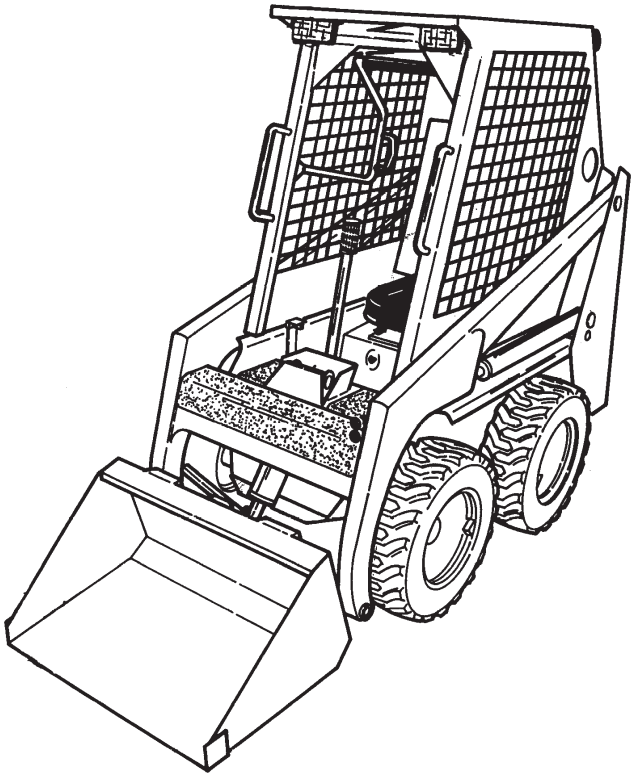

Dealer Copy -- Not for Resale

MELROE
INGERSOLL-RAND

6570160 (1–87) Printed in U.S.A.

© Melroe Company 1987

Dealer Copy -- Not for Resale

MAINTENANCE SAFETY

WARNING

Instructions are necessary before operating or servicing machine. Read and understand the Operation & Maintenance Manual, Operator's Handbook and signs (decals) on machine. Follow warnings and instructions in the manuals when making repairs, adjustments or servicing. Check for correct function after adjustments, repairs or service. Untrained operators and failure to follow instructions can cause injury or death.

W-2003-0903

Safety Alert Symbol: This symbol with a warning statement, means: "Warning, be alert! Your safety is involved!" Carefully read the message that follows.

CORRECT

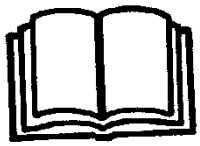

B-10731a

Never service the Bobcat Skid-Steer Loader without instructions.

CORRECT

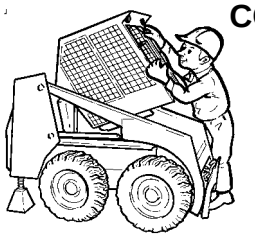

B-12365

Use the correct procedure to lift or lower operator cab.

CORRECT

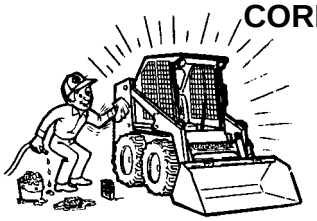

B-7469

Cleaning and maintenance are required daily.

WRONG

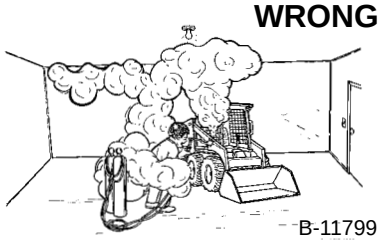

B-11799

Have good ventilation when welding or grinding painted parts.

Wear dust mask when grinding painted parts. Toxic dust and gas can be produced.

Avoid exhaust fume leaks which can kill without warning. Exhaust system must be tightly sealed.

WRONG

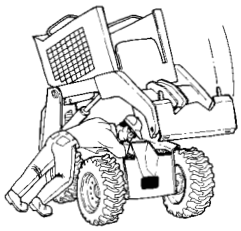

B-15231

Disconnecting or loosening any hydraulic tubeline, hose, fitting, component or a part failure can cause lift arms to drop. Do not go under lift arms when raised unless supported by an approved lift arm support device. Replace it if damaged.

WRONG

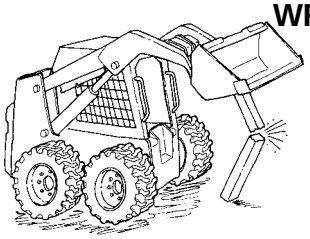

B-15280

Never work on loader with lift arms up unless lift arms are held by an approved lift arm support device. Replace if damaged.

Never modify equipment or add attachments not approved by Bobcat Company.

WRONG

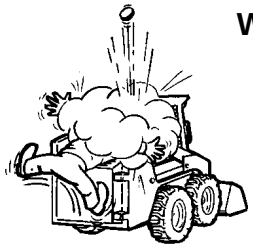

B-6590

Stop, cool and clean engine of flammable materials before checking fluids.

Never service or adjust loader with the engine running unless instructed to do so in the manual.

Avoid contact with leaking hydraulic fluid or diesel fuel under pressure. It can penetrate the skin or eyes.

Never fill fuel tank with engine running, while smoking or when near open flame.

WRONG

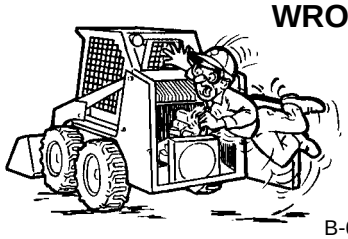

B-6580

Keep body, jewelry and clothing away from moving parts, electrical contact, hot parts and exhaust.

Wear eye protection to guard from battery acid, compressed springs, fluids under pressure and flying debris when engines are running or tools are used. Use eye protection approved for type of welding.

Keep rear door closed except for service. Close and latch door before operating the loader.

WRONG

B-6589

Lead-acid batteries produce flammable and explosive gases.

Keep arcs, sparks, flames and lighted tobacco away from batteries.

Batteries contain acid which burns eyes or skin on contact. Wear protective clothing. If acid contacts body, flush well with water. For eye contact flush well and get immediate medical attention.

Maintenance procedures which are given in the Operation & Maintenance Manual can be performed by the owner/operator without any specific technical training. Maintenance procedures which are **not** in the Operation & Maintenance Manual must be performed **ONLY BY QUALIFIED BOBCAT SERVICE PERSONNEL. Always use genuine Bobcat replacement parts.** The Service Safety Training Course is available from your Bobcat dealer.

MSW01-0805

Dealer Copy -- Not for Resale

Dealer Copy -- Not for Resale

FOREWORD

This manual gives the owner/operator necessary operating, servicing and adjustment of the Bobcat loader and overhaul instructions of the drive system, loader hydraulic/hydrostatic system and general main frame parts.

Refer to the Operator's Manual for operating instructions (Starting Procedure, Daily Checks, Bucket Operation, etc.)

A general inspection of the following items must be made whenever the loader has had service or repair:

1. Check hydraulic fluid level, engine oil level and fuel supply.
2. Inspect for any sign of fuel, oil or hydraulic fluid leaks.
3. Lubricate the loader.
4. Check the condition of the battery and cables.
5. Inspect air cleaner for damage or leaks. Check element and replace as needed.
6. Check electrical charging system.
7. Check tires for wear and pressure.
8. Inspect Operator Cab, Seat Belt, Seat Bar, Safety Treads, Lights, Horn, Safety Signs (Decals), Brake etc.
9. Inspect for loose or broken parts or connections.
10. Operate the loader and check all functions.
11. Inform the Owner/Operator of any items that need service.

Dealer Copy -- Not for Resale

CONTENTS

SAFETY INSTRUCTIONS i
FIRE PREVENTION ii
SERIAL NUMBER LOCATIONS iii
DELIVERY REPORT iii
BOBCAT LOADER IDENTIFICATION iv
PREVENTIVE MAINTENANCE 1
HYDRAULIC SYSTEM 2
HYDROSTATIC SYSTEM 3
DRIVE SYSTEM 4
MAIN FRAME 5
ELECTRICAL SYSTEM 6
ENGINE SERVICE 7
TECHNICAL DATA 8

Dealer Copy -- Not for Resale

I. SAFETY INSTRUCTIONS

A. SAFETY IS YOUR RESPONSIBILITY

The Skid Steer loader is a highly maneuverable and compact machine. In operation, it is rugged and useful under a wide variety of conditions. This presents an operator with hazards which are common for off highway, rough terrain applications but are not unique for use of Bobcat loaders. The loader has an internal combustion engine with resultant heat and exhaust. All exhaust gases can kill so the loader must be used with adequate ventilation. The loader must not be used in an area with explosive dusts or gases or so that the engine can contact flammable material. The loader has a spark arrestor muffler which is required for operation in certain areas.

For loader applications, the dealer recommends the capabilities and restrictions of the loader and attachments for each application. The dealer demonstrates the safe operation of the loader according to the manufacturer's instructional materials; which are also available to all operators. The dealer can also identify unsafe modifications or use of unapproved attachments. The attachments and buckets are designed for rated capacity and secure fastening to the loader. For each model loader, the user must check with the dealer, or manufacture's literature, to identify each bucket or attachment for safe loads of materials of specified densities.

The following publications provide information on the safe use of the loader and attachments:

1. The Delivery Report is used to check whether complete instructions have been given to the new owner.
2. The Operator's Manual delivered with each loader gives operating information as well as routine maintenance and service.
3. Every loader has machine signs (decals) which instruct on the safe care and operation of the loader. The complete signs and their locations are shown in the Operator's Manual. All signs are available from your Bobcat dealer.
4. The loader has a plastic Operator Handbook fastened to the operator cab. It has brief instructions always available to the operator. The handbook is available from your Bobcat dealer.
5. The Service Manual and Parts Book are optional manuals from your Bobcat dealer for use by mechanics to do shop–type service and repair work.

The dealer and owner/operator review the recommended uses of the loader and attachments at the time of delivery of the loader. If change of the use of the loader occurs in the future, the owner/operator must remember to ask the dealer for recommendations on the new use of the loader.

B. BEFORE YOU OPERATE THE BOBCAT LOADER

⚠ WARNING

Operator must have instructions before running the machine. Untrained operators can cause injury or death.

W–2001–1285

B–10731

This Service Manual was written to give the service personnel instructions on the safe service of the Bobcat loader. READ AND UNDERSTAND THIS SERVICE MANUAL BEFORE SERVICING YOUR BOBCAT.

⚠ WARNING

Warnings on the machine and in the manuals are for your safety. Failure to obey warnings can cause injury or death.

W–2044–1285

IMPORTANT

This notice identifies procedures which must be followed to avoid damage to the machine.

I–2019–0284

Dealer Copy -- Not for Resale

C. SAFE OPERATION NEEDS A QUALIFIED OPERATOR

A QUALIFIED OPERATOR* MUST DO THE FOLLOWING:

1. UNDERSTAND THE WRITTEN INSTRUCTIONS, RULES AND REGULATIONS

   a. The written instructions from the Melroe Co. include the delivery report, loader operator's handbook and manual, attachment manual and machine signs (decals).

   b. Check the rules and regulations at your location. The rules may include an employer's work safety requirements. Regulations may identify a hazard such as utility supply line.

2. HAVE TRAINING WITH ACTUAL OPERATION

   a. Operator training must consist of a demonstration and verbal instruction. This training is given by the Bobcat dealer before the loader is delivered.

   b. The new operator should start in an area without bystanders and use all the controls until he can control the loader at full use under the conditions for his work area.

3. KNOW THE WORK CONDITIONS

   a. For each material to be handled, the operator must know how to avoid exceeding the rated operating capacity of the loader. For example in handling a certain loose material with a given bucket, he must know whether he can safely take a full or part of a bucket load.

   b. The operator must know any prohibited uses or work areas for the loader. For example he needs to know about excessive slopes.

* For an operator to be qualified, he must not use drugs or alcoholic drinks which change his alertness or coordination while working. An operator who is taking prescription drugs must get medical advice on whether or not he can safely operate a machine.

II. FIRE PREVENTION

The loader has several components which are at high temperature under normal operating conditions. The primary source of high temperatures in the engine and exhaust system. The electrical system, if damaged or incorrectly maintained, can be a source of arcs or sparks. These conditions make it important to avoid applications where explosive dust or gases can be ignited by arcs, sparks or heat.

Flammable debris (leaves, straw, etc.) must be removed regularly. If flammable debris is allowed to accumulate, it will increase the condition for fire hazard. The loader must be cleaned as often as necessary to avoid this accumulation. This flammable debris in the engine compartment can be a fire hazard when the loader is parked with a hot engine.

The spark arrestor muffler is designed to control the emission of hot particles from the engine and exhaust system, but the muffler and the exhaust gases are still hot. This spark arrestor muffler does not change the need to avoid use of the loader in an atmosphere with explosive dust or gases or where the exhaust can contact flammable material.

1. Do not use the Bobcat loader in applications where explosive dust or gases can be ignited by arcs, sparks, hot components or exhaust gases.

2. The operator cab, engine compartment and engine cooling system must be inspected every day and cleaned if necessary to prevent overheating. Remove all flammable material.

3. Check all electrical wiring and connections for damage. Keep the battery terminals clean and tight. Repair or replace any damaged part.

4. Check for damage and leakage at all the fuel, oil and hydraulic tubes, hoses and fittings. Tighten or replace any that show leakage. Always clean fluid spills.

5. Use ether or starting fluids only when approved by the engine manufacturer. Do not use ether or starting fluids on any engine which has glow plugs. These starting aids can explode and injure bystanders.

6. Always clean the loader before doing any welding. Cover rubber hoses, battery and all other flammable parts. Keep a fire extinguisher near the loader when welding.

7. Stop the engine and let it cool before adding fuel. No smoking.

8. Use the procedure in Operator's Manual for connecting and charging batteries.

9. Use the procedure in Operator's Manual for servicing the spark arrestor muffler every 100 hours of operation.

Dealer Copy -- Not for Resale

III. SERIAL NUMBER LOCATIONS

It is important to make the correct reference to the Serial Number of the Bobcat loader and/or engine when repairs are done or when ordering parts. It is possible that the present loaders do not use the same parts as the earlier loaders.

LOADER SERIAL NUMBER

The Bobcat loader serial number plate location is on the inside of the operator cab on the right fender and in the front of the seat **[A]**.

Explanation of loader Serial Number:

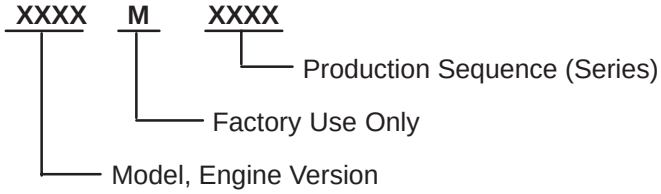

ENGINE SERIAL NUMBER LOCATION

The engine serial number is located on the engine shrouding on the rear of the engine **[B]**.

A

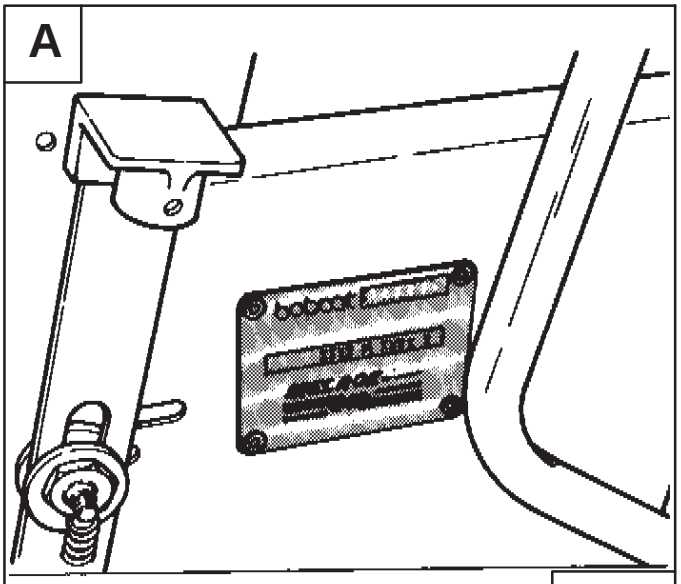

B

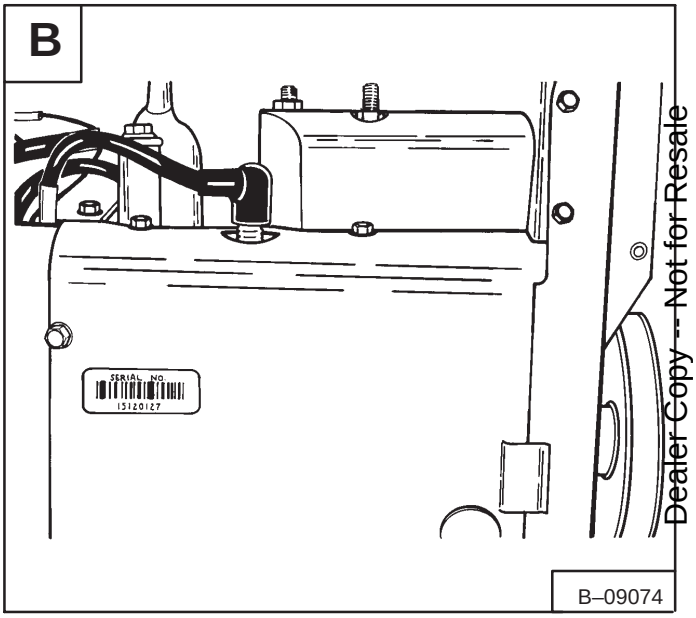

Dealer Copy -- Not for Resale

IV. DELIVERY REPORT

The Delivery Report **[C]** is to be filled out by the dealer and signed by the owner or operator when the Bobcat loader is delivered. An explanation of the form must be given to the owner. Make sure it is filled out completely before your sign it.

C

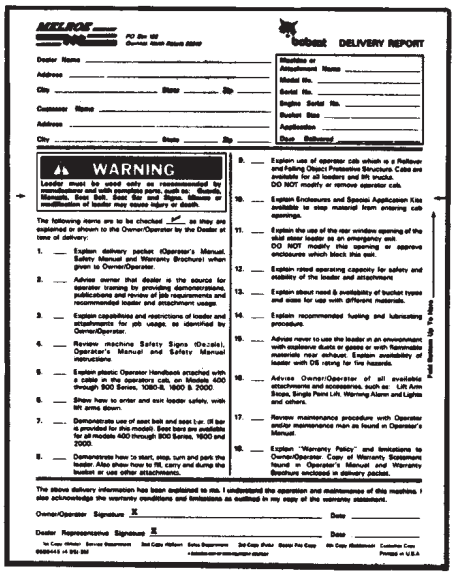
DELIVERY REPORT

WARNING

V. BOBCAT LOADER IDENTIFICATION

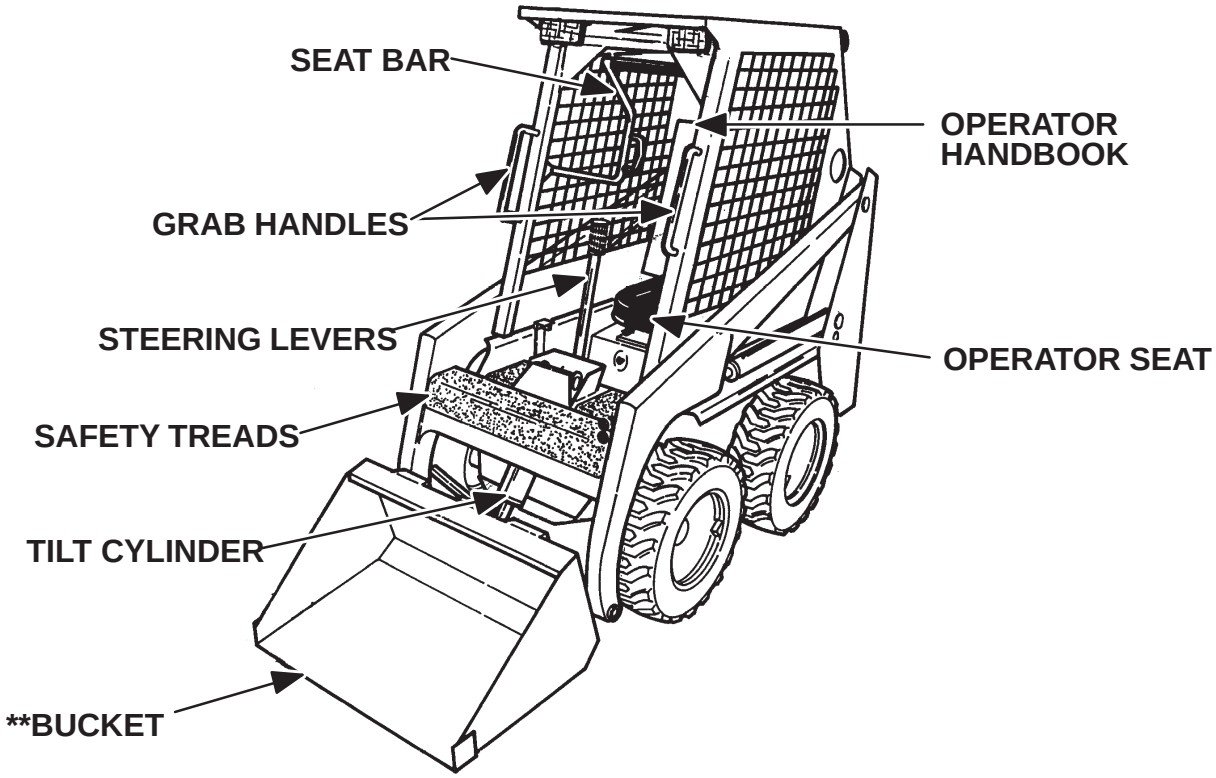

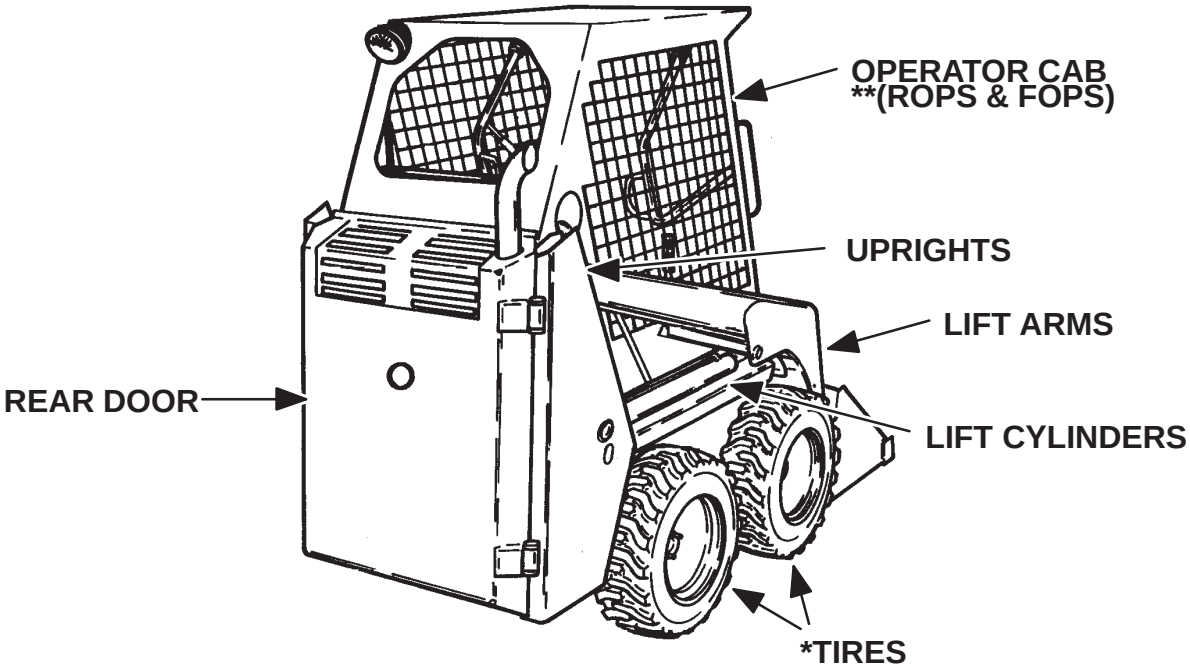

B–09039
B–09040

*** TIRES – Flotation (Optional) tires are shown. Bobcats are base–equipped with standard tires.**
**** BUCKET – Several different buckets and other attachments are available for the Bobcat loader.**
***** ROPS, FOPS – Roll–Over Protective Structure, Falling Object Protective Structure.**

Dealer Copy -- Not for Resale

Page Number

LIFT ARM STOP
Procedure 1–4

LIFT AND BLOCKING THE LOADER
Procedure 1–2

OPERATOR CAB
Lowering the Operator Cab 1–7
Raising the Operator Cab 1–7
Seat Bar Inspection 1–5
Seat Bar Maintenance 1–6
Seat Bar System 1–5

TRANSPORTING THE LOADER
Procedure 1–3

USING AN EXTRA BATTERY (JUMP START)
Procedure 1–8

Dealer Copy -- Not for Resale

Dealer Copy -- Not for Resale

SERVICE SCHEDULE

Maintenance work must be done at regular intervals. Failure to do so will result in damage to the Bobcat loader or the engine. The service is a guide for correct maintenance of the Bobcat loader.

HOURS CONVERSION CHART

An average work day is approximately 8 hours. If you use the loader for the following hours a day, do the service as recommended in the Service Schedule.

Use Loader Hours Per Day	CHECK OR SERVICE AS INDICATED BELOW						
	Service Schedule Hours						
	10 Hrs.	25 Hrs.	50 Hrs.	100 Hrs.	250 Hrs.	500 Hrs.	1000 Hrs.
2–3	4 days	10 days	3 wks.	6 wks.	6 mnths.	10 mnths	20 mnths.
4–5	3 days	5 days	11 days	4 wks.	3 mnths.	5 mnths.	10 mnths.
6–7	2 days	4 days	8 days	2 wks.	5 wks.	4 mnths.	7 mnths.
8	each day	3 days	6 days	10 days	4 wks.	2 mnths.	5 mnths.

SERVICE SCHEDULE		HOURS							
ITEM	SERVICE REQUIRED	5	8–10	25	50	100	250	500	1000
Engine Oil	Change engine oil (New Engine Only).	■							
Engine Oil	Check level and add oil as needed.		■						
Engine Cooling System	Check and clean as needed.		■						
Tires	Check air pressure and for damage to the tires.		■						
Seat Belt & Seat Bar	Check the condition of seat belt. Check the seat bar for correct operation to lock both foot pedals.		■						
Safety Signs (Decals) & Safety Treads	Check for damaged signs (decals) & safety treads.		■						
	Replace any signs (decals) & safety treads that are damaged.		■						
All Loader Pivot Points	Add grease to the fittings until the extra grease shows.		■						
Hydraulic Fluid	Check the fluid level in the reservoir & add fluid as needed.		■						
Engine Oil	Replace oil.			■					
Engine Air Cleaner	Clean or replace filter element as needed.			■					
Battery	Check water level and add as needed. Clean the cables.				■				
Control Pedals & Steering	Check operation. Make repairs & adjustments as needed.				■				
Wheel Nuts	Check for loose wheel nuts and tighten to 40–50 ft.–lbs. (54–61 Nm) torque.				■				
Parking Brake	Check operation. Make adjustments as needed.				■				
Hydraulic Filter Element	Replace filter element.					■			
Spark Arrestor Muffler	Clean the spark chamber.					■			
Steering Levers	Lubricate the grease fittings and the oil hole in the steering shaft.						■		
Engine Ignition System	Replace the spark plugs.						■		
Engine Air Shrouding	Remove and clean shrouding and cooling fins.						■		
Engine Fuel Filter	Replace the filter element.						■		
Hydraulic Reservoir Fill Cap (Breather)	Replace the breather cap.							■	
Final Drive Transmission (Chaincase)	Replace the fluid.								■
Hydraulic/Hydrostatic (Reservoir)	Replace the fluid.								■

Dealer Copy -- Not for Resale

⚠ WARNING

Instructions are necessary before operating or servicing machine. Read and understand the Operation & Maintenance Manual, Handbook and signs (decals) on machine. Follow warnings and instructions in the manuals when making repairs, adjustments or servicing. Check for correct function after adjustments, repairs or service. Untrained operators and failure to follow instructions can cause injury or death.

W–2003–0199

LIFTING AND BLOCKING THE FELLER BUNCHER

Procedure

Always park the loader on a level surface.

⚠ WARNING

Put jackstands under the front axles and rear corners of the frame before running the engine for service. Failure to use jackstands can allow the machine to fall or move and cause injury or death.

W–2017–0286

Lower the lift arms, stop the engine.

Put the floor jack under the rear of the loader.

Lift the loader and install jackstands **[B]**.

Put the floor jack under the front of the loader.

Lift the front of the loader and install jackstands **[C]**.

NOTE: Make sure the jackstands do not touch the tires.

A

B–07023

B

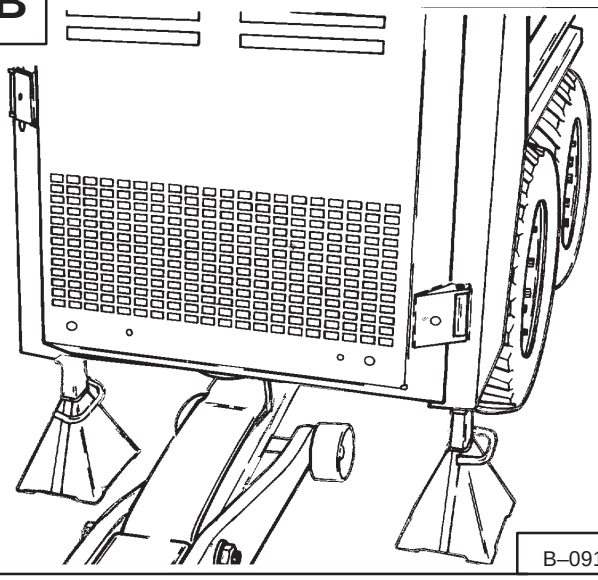

B–09135

C

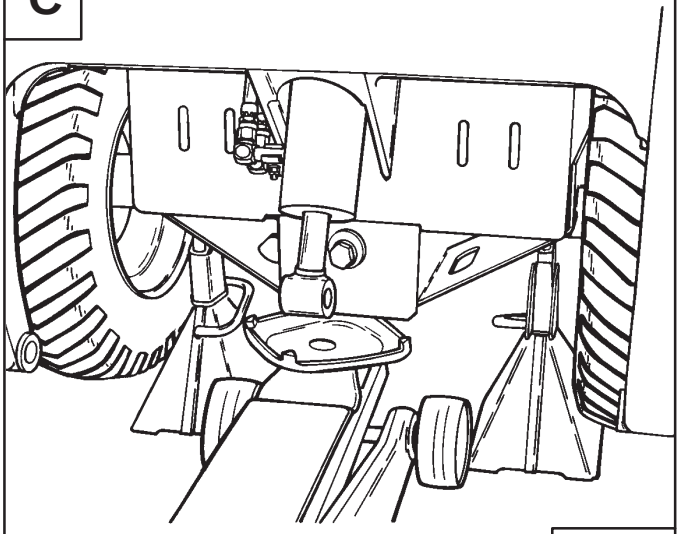

B–09134

Dealer Copy -- Not for Resale

TRANSPORTING THE LOADER

Procedure

⚠ WARNING

Adequately designed ramps of sufficient strength are needed to support the weight of the machine when loading onto a transport vehicle. Wood ramps can break and cause personal injury.

W–2058–0494

A loader with empty bucket or no attachment must be loaded backwards onto the transport vehicle **[A]**.

After the loader is loaded onto the transport vehicle, lower the lift arms and stop the engine.

Engage the parking brake. Lift the seat bar and move the foot pedals until both pedals are locked.

A

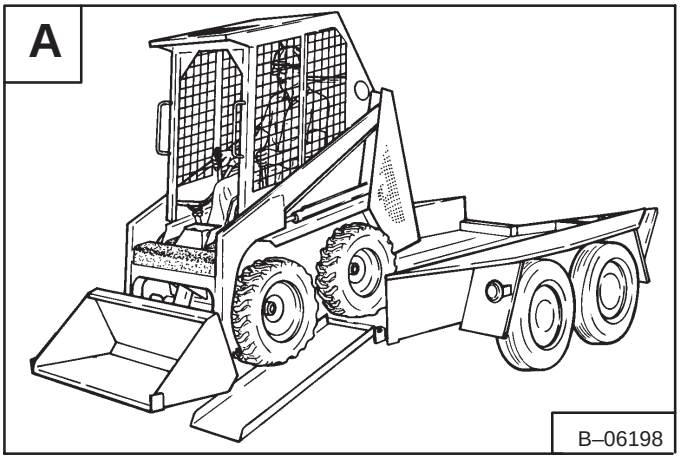

B–06198

Install chains (at the front and rear of the loader) to hold the loader in position to prevent it from moving during sudden stops or going up and down slopes **[B]**.

B

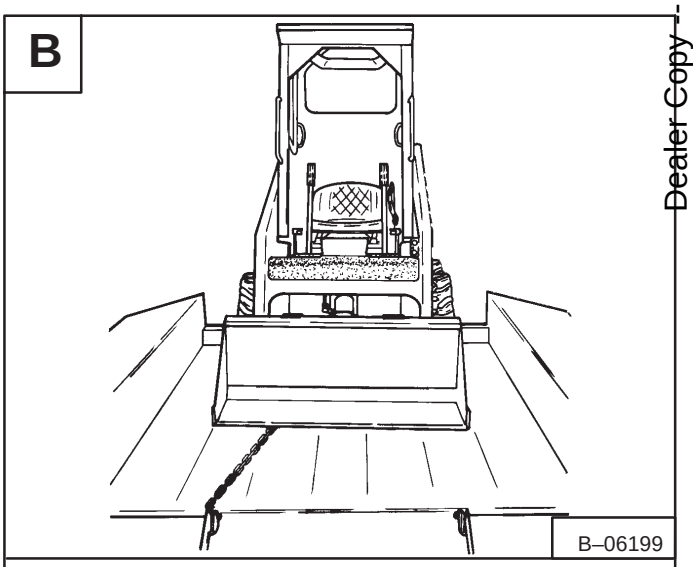

B–06199

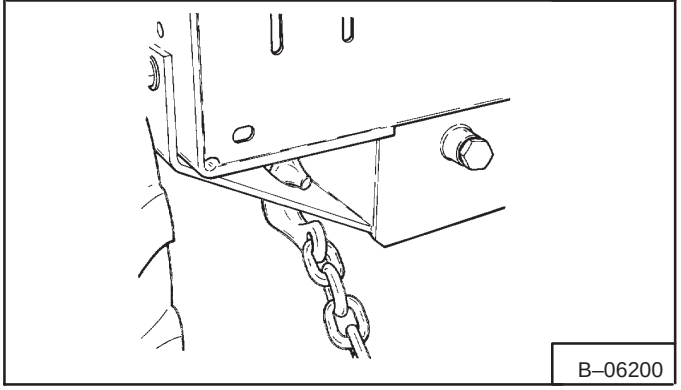

B–06200

Dealer Copy -- Not for Resale

LIFT ARM STOP

Procedure

⚠ WARNING

Never work on a machine with the lift arms up unless the lift arms are secured by an approved lift arm support device. Failure to use an approved lift arm support device can allow the lift arms or attachment to fall and cause injury or death.

W–2059–0598

NOTE: Lift arm stops are available from your local dealer.

One person must stay in the operator's seat, with the seat belt fastened and the seat bar lowered, while the second person installs the lift arm stop **[A]**.

⚠ WARNING

Put jackstands under the front axles and rear corners of the frame before running the engine for service. Failure to use jackstands can allow the machine to fall or move and cause injury or death.

W–2017–0286

Start the engine and raise the lift arms all the way up. Have the second person install the lift arm stop over the rod of one lift cylinder.

The lift arm stop must be tight against the cylinder rod. Lower the lift arms until the stop is held between and the lift arm and lift cylinder.

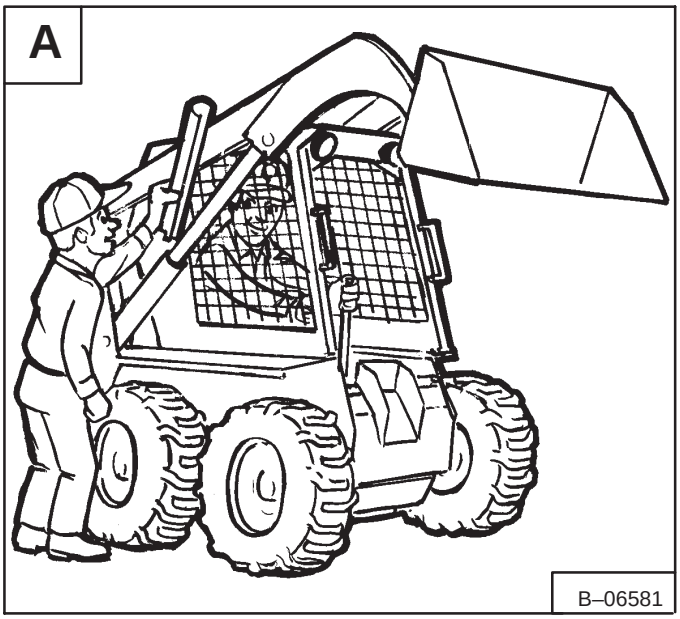

Dealer Copy -- Not for Resale

Dear

Thanks very much for your visiting and patience.

Want to get more information,

Please click here, Go back to the page.

After your payment, you will have instant access to your download.

The Download Link will also be sent to your e-mail.

You will get the complete manual

Have any questions

please write to me

admin@servicemanualperfect.com